La política de patentes desde la empresa

(una aproximación al tema desde el punto de vista práctico)

Las imágenes que aparecen en estas transparencias, en su mayoría (no todas) están tomadas del libro *"New & Improved - Inventors and inventions that have changed the modern world"* by R. Baker. Published for the British Library by British Museum Publications Limited. ISBN 0 7141 0380 2

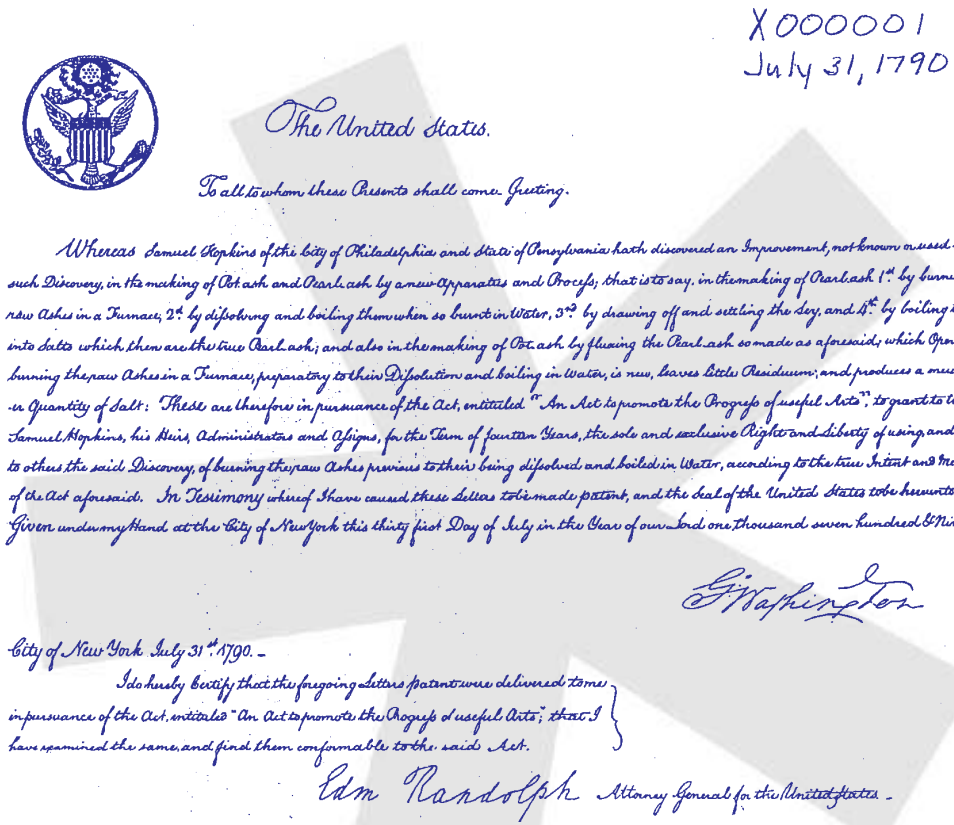

X000001
July 31, 1790

The United States.

To all to whom these Presents shall come. Greeting.

Whereas Samuel Hopkins of the City of Philadelphia and State of Pensylvania hath discovered an Improvement, not known or used before such Discovery, in the making of Pot ash and Pearl ash by a new Apparatus and Process; that is to say, in the making of Pearl ash 1st by burning the raw Ashes in a Furnace, 2d by dissolving and boiling them when so burnt in Water, 3rd by drawing off and settling the ley, and 4th by boiling the ley into Salts which then are the true Pearl ash; and also in the making of Pot ash by fluxing the Pearl ash so made as aforesaid; which Operation of burning the raw Ashes in a Furnace, preparatory to their Dissolution and boiling in Water, is new, leaves little Residuum; and produces a much greater Quantity of Salt: These are therefore in pursuance of the Act, intitled "An Act to promote the Progress of useful Arts", to grant to the said Samuel Hopkins, his Heirs, Administrators and Assigns, for the Term of fourteen Years, the sole and exclusive Right and liberty of using and vending to others the said Discovery, of burning the raw Ashes previous to their being dissolved and boiled in Water, according to the true Intent and Meaning of the Act aforesaid. In Testimony whereof I have caused these Letters to be made patent, and the Seal of the United States to be hereunto affixed. Given under my Hand at the City of New York this thirty first Day of July in the Year of our Lord one thousand seven hundred & Ninety.

G Washington

City of New York July 31st 1790.

I do hereby Certify that the foregoing Letters Patent were delivered to me in pursuance of the Act, intitled "An Act to promote the Progress of useful Arts"; that I have examined the same, and find them conformable to the said Act.

Edm Randolph Attorney General for the United States.

Samuel Hopkins (1790). Procedimiento para obtener "potash and pearl ash". Primera patente norteamericana (firmada por G. Washington)

Significado industrial de las patentes

Favorecen la rentabilidad de la inversión creativa

- **Monopolios temporales**
- **Patrimonio negociable**
- **Mercado de tecnología**
- **Obstáculos a competidores**

"Las patentes añaden el combustible del interés al fuego del ingenio." (A. Lincoln)

Permiten combatir con eficacia a los imitadores y copiadores

Son la mejor fuente de información tecnológica que existe

Las patentes son instrumentos ofensivos, no defensivos

Instrumento imprescindible en la política de desarrollo de las empresas industriales

Huarte&Pi [*]

Política de patentes de la empresa

INFORMACION

CREACION Y GESTION DE LA CARTERA DE PATENTES

PREVENCIÓN DE RIESGO DE INFRACCIÓN

A.D. 1876, *22nd July.* N° 2973.

Photography in Colours.

LETTERS PATENT to William Morgan-Brown, of the Firm of Brandon and Morgan-Brown, Engineers and Patent Agents, of 38, Southampton Buildings, London, and 13, Rue Gaillon, Paris, for the Invention of "IMPROVEMENTS IN PHOTOGRAPHY IN COLOURS, AND IN THE APPARATUS FOR THAT PURPOSE." A communication from abroad by Louis Ducos Duhauron, of Agen (Lot and Garonne), France, Chemist.

Sealed the 17th November 1876, and dated the 22nd July 1876.

COMPLETE SPECIFICATION filed by the said William Morgan-Brown at the Office of the Commissioners of Patents on the 22nd July 1876.

WILLIAM MORGAN-BROWN, of the Firm of Brandon and Morgan-Brown, Engineers and Patent Agents, of 38, Southampton Buildings, London, and 13, Rue Gaillon, Paris. "IMPROVEMENTS IN PHOTOGRAPHY IN COLOURS, AND IN THE APPARATUS FOR THAT PURPOSE." A communication from abroad by Louis Ducos Duhauron, of Agen (Lot and Garonne), France, Chemist.

GENERAL DESCRIPTION OF THE SYSTEM.

The problem of photography in colors such as I express it does not consist in submitting to the luminous action a surface prepared in a manner to appropriate and preserve at each point the colouration of the rays which strike it. What I ask is that the sun avails itself judiciously of an invariable palette, to which it is trusted. It must be that he only charged with the choosing and the mixing of the colours furnished to him will obtain incomparable copyist the most learned and the most authentic of the representations of nature. The problem being defined in these terms, an observation that I have checked by numerous experience has served for the point of departure to resolve it. That observation is this: In opposition to the colors of the spectrum, the scale of which is formed of innumerable shades, and allows of our distinguishing and naming seven principal ones, the coloring substances which serve to express them are reduced to three; red, blue, yellow. This triplicity of colors has been of long date experimentally but confusedly recognised; if it had been verified beyond possibility of doubt it would have long since been an axiom,

[*Price* 8*d.*]

William Morgan-Brown (1876). Patente británica de importación sobre un invento francés

La Información sobre patentes

Necesidad de conocer

- Lo que hacen los demás
- Lo que no se puede hacer
- Lo que queda por hacer

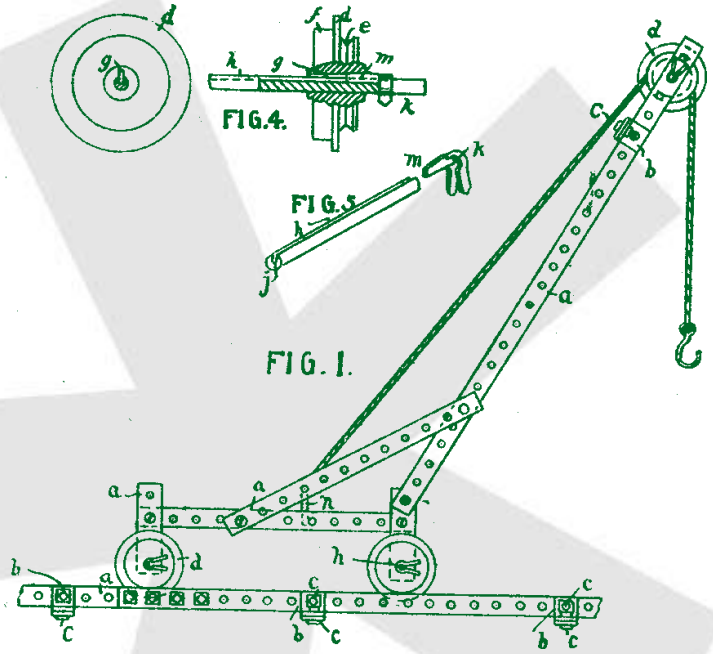

Frank Hornby (1901). Meccano

La Información sobre patentes

Las patentes son la fuente mejor, más abundante y más rápida de información tecnológica

Instrumento para:

- **Adquisición de conocimientos.**
- **Generación de ideas.**
- **Planificación de proyectos.**
- **Decisión de patentar.**
- **Prevención de riesgos.**
- **Transferencia de tecnología.**

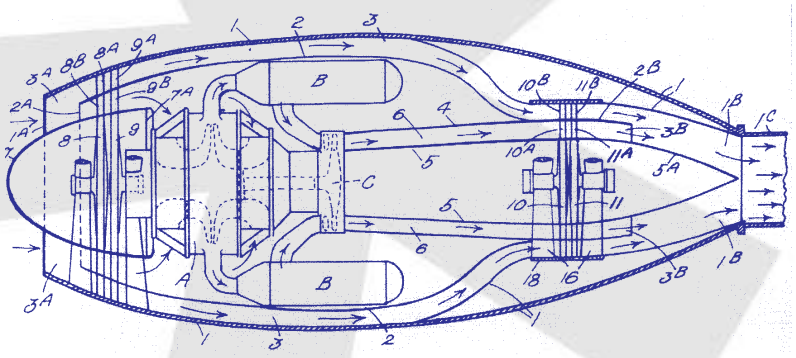

Frank Whittles (1946). Propulsor Jet para aviación. Primer desarrollo realmente operativo. Basado en patentes de ¡1867!, 1930 y 1937.

Huarte&Pi [*]

La Información sobre patentes

Oficina de Patentes

Empresas innovadoras

Empresas no innovadoras

Identificación de campos de tecnología libres de patentes.

Previsión del riesgo de infracción de patentes.

© Dialog Co.

Adivine quién no se ha preocupado de la información de patentes

La Información sobre patentes

STN® INTERNATIONAL

Patent Information from Chemical Abstracts Service

Questel

ESPACE

DERWENT

La Información sobre patentes

Relación con el entorno de los competidores

. Vigilancia tecnológica de la competencia.

. Prevención del riesgo de infracción.

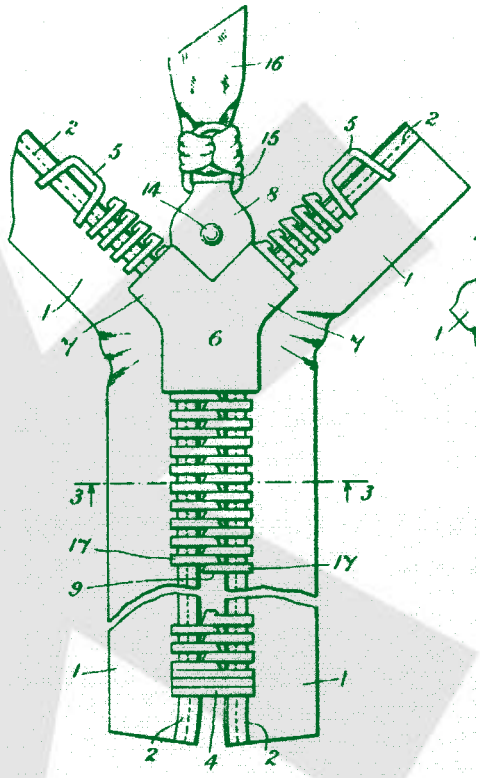

Gideon Sundback (1915)
Zip fastener

La Información sobre patentes

Herramienta básica en el trabajo del profesional de las patentes

- **. El estado de la técnica.**
- **. Patentabilidad.**
- **. Estudio de riesgos.**
- **. Observaciones, oposiciones y recursos.**

Huarte&Pi

Procesos Creativos

Etapa clave: generación de nuevas ideas

Estudio del mercado: necesidades no cubiertas.

Estudio de la tecnología: resolución de problemas técnicos.

Análisis precoz del entorno de patentes

Identificación de rutas viables que no colisionen con patentes anteriores o que puedan conducir a un resultado patentable, antes de iniciar cualquier inversión en el proyecto

Análisis precoz

Investigación bibliográfica que incluya a patentes

Valoración de:

- **Grado de madurez de la tecnología.**
- **Identificación de competidores.**
- **Identificación y evaluación de riesgos.**
- **Identificación y evaluación de carencias.**
- **Posibilidades de obtener patentes.**

223,898. ELECTRIC LAMP. THOMAS A. EDISON, Menlo Park, N. J. Filed Nov. 4, 1879.

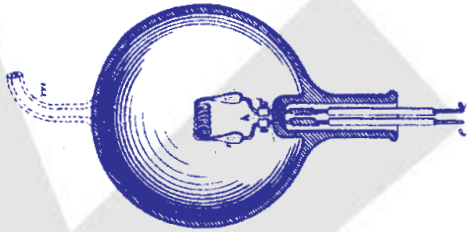

Claim.—1. An electric lamp for giving light by incandescence, consisting of a filament of carbon of high resistance, made as described, and secured to metallic wires, as set forth.

2. The combination of carbon filaments with a receiver made entirely of glass and conductors passing through the glass, and from which receiver the air is exhausted, for the purposes set forth.

3. A carbon filament or strip coiled and connected to electric conductors so that only a portion of the surface of such carbon conductors shall be exposed for radiating light, as set forth.

4. The method herein described of securing the platina contact-wires to the carbon filament and carbonizing of the whole in a closed chamber, substantially as set forth.

Thomas Alva Edison (1880).
Lámpara incandescente.

Huarte&Pi

Creación y Gestión de la cartera de patentes

Patent No. 810196

Elizabeth the Second by the Grace of God of the United Kingdom of Great Britain and Northern Ireland and of Her other Realms and Territories Queen, Head of the Commonwealth, Defender of the Faith: To all to whom these presents shall come greeting:

WHEREAS National Research Development Corporation, a British Corporation established by statute, of 1, Tilney Street, London, W.1.,

(hereinafter referred to as the said applicants) have prayed that a patent may be granted unto them for the sole use and advantage of an invention for Cephalosporin C,

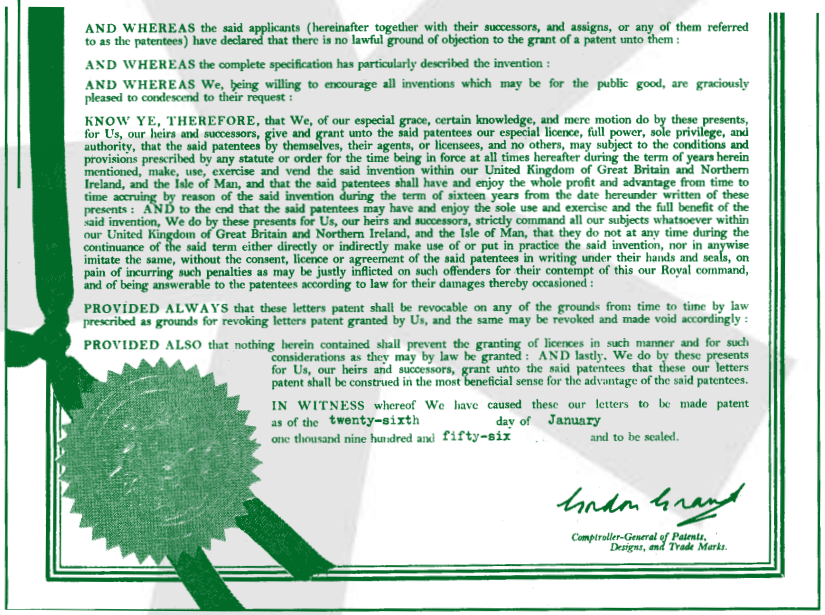

AND WHEREAS the said applicants (hereinafter together with their successors, and assigns, or any of them referred to as the patentees) have declared that there is no lawful ground of objection to the grant of a patent unto them:

AND WHEREAS the complete specification has particularly described the invention:

AND WHEREAS We, being willing to encourage all inventions which may be for the public good, are graciously pleased to condescend to their request:

KNOW YE, THEREFORE, that We, of our especial grace, certain knowledge, and mere motion do by these presents, for Us, our heirs and successors, give and grant unto the said patentees our especial licence, full power, sole privilege, and authority, that the said patentees by themselves, their agents, or licensees, and no others, may subject to the conditions and provisions prescribed by any statute or order for the time being in force at all times hereafter during the term of years herein mentioned, make, use, exercise and vend the said invention within our United Kingdom of Great Britain and Northern Ireland, and the Isle of Man, and that the said patentees shall have and enjoy the whole profit and advantage from time to time accruing by reason of the said invention during the term of sixteen years from the date hereunder written of these presents: AND to the end that the said patentees may have and enjoy the sole use and exercise and the full benefit of the said invention, We do by these presents for Us, our heirs and successors, strictly command all our subjects whatsoever within our United Kingdom of Great Britain and Northern Ireland, and the Isle of Man, that they do not at any time during the continuance of the said term either directly or indirectly make use of or put in practice the said invention, nor in anywise imitate the same, without the consent, licence or agreement of the said patentees in writing under their hands and seals, on pain of incurring such penalties as may be justly inflicted on such offenders for their contempt of this our Royal command, and of being answerable to the patentees according to law for their damages thereby occasioned:

PROVIDED ALWAYS that these letters patent shall be revocable on any of the grounds from time to time by law prescribed as grounds for revoking letters patent granted by Us, and the same may be revoked and made void accordingly:

PROVIDED ALSO that nothing herein contained shall prevent the granting of licences in such manner and for such considerations as they may by law be granted: AND lastly, We do by these presents for Us, our heirs and successors, grant unto the said patentees that these our letters patent shall be construed in the most beneficial sense for the advantage of the said patentees.

IN WITNESS whereof We have caused these our letters to be made patent as of the twenty-sixth day of January one thousand nine hundred and fifty-six and to be sealed.

Comptroller-General of Patents, Designs, and Trade Marks.

National Research Development Corporation (1956). Cefalosporina C

PATENTAR

¿Por qué?
¿Qué?
¿Cuándo?
¿Dónde?
¿Cómo?

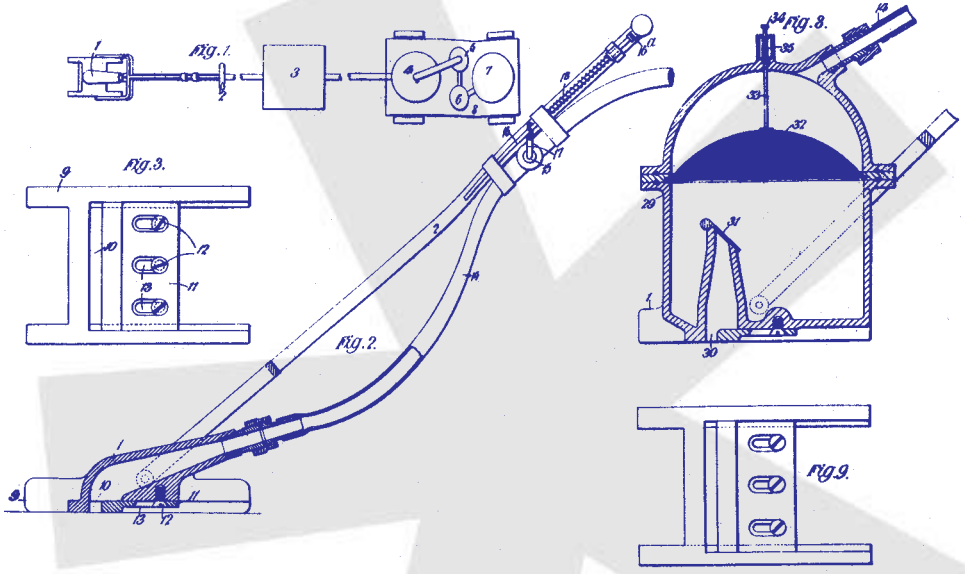

Cecil Hubert Booth (1901). Aspiradora doméstica.

¿Por qué patentar?

Patente v. Explotación en secreto

Patente: Monopolio temporal, pero obligación de descripción suficiente.
Explotación en secreto: Ocultación a los competidores, pero no monopolio.

Aspectos a tener en cuenta:

¿Puede mantenerse un secreto efectivo? ¿Durante cuánto tiempo?

¿Existe riesgo de que un competidor patente antes? La excepción por uso previo: su dificultad de prueba y sus limitaciones.

¿Resulta asequible probar la infracción de la patente? Las patentes de procedimiento y la inversión de la carga de la prueba.

¿Existe una protección adecuada del derecho de patente?

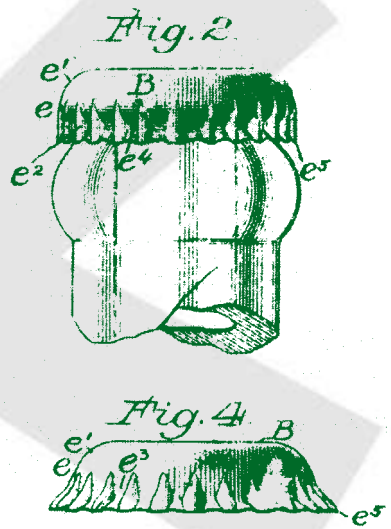

William Painter (1892)
Tapón corona.

¿Qué patentar?

Cualquier desarrollo no excluido por la Ley que sea potencialmente rentable y tenga posibilidades de superar las exigencias de novedad y actividad inventiva.

Análisis de rentabilidad

Análisis de patentabilidad

Otros motivos: Por si acaso; por imágen; para justificar la productividad del departamento de I+D; como publicación defensiva; para crear incertidumbre en los competidores; para eludir el riesgo de infracción de otra patente anterior (!); por si cuela, ya que la calidad del examen en la OEP y a USPTO ha bajado sensiblemente; porque otros lo hacen; etc.

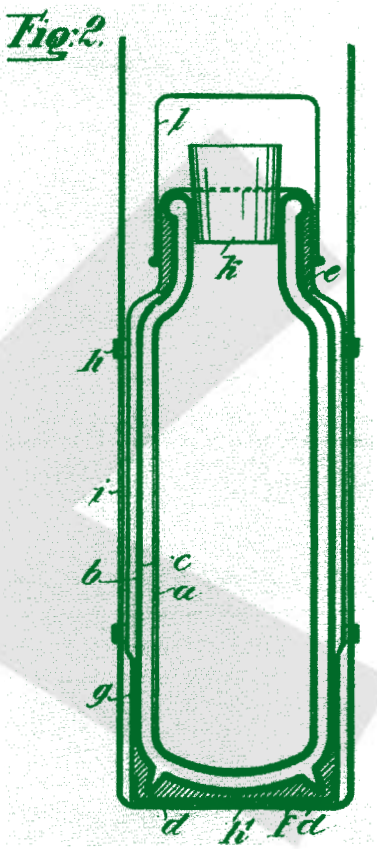

Reinhold Burger (1904)
Termo

Análisis de patentabilidad

Búsqueda sobre el estado de la técnica publicado y accesible (esto solamente representa una parte del estado de la técnica real).

Valoración por un experto en patentes, que además tenga una buena capacidad de comprensión sobre la tecnología implicada.

Objetivos:

- **Evitar el coste de solicitudes de patente inútiles.**
- **No crear expectativas falsas.**
- **Establecer el estado de la técnica que permitirá redactar correctamente y con eficacia la descripción y reivindicaciones.**

Huarte&Pi [*]

Análisis de patentabilidad

Búsqueda bibliográfica

↓

Valoración

Positivo	**Dudoso**	**Negativo**
No certeza Reducción incertidumbre	Publicación defensiva ¿Modelo utilidad?	Abandono Publicación defensiva ¿Modelo utilidad?

Análisis de patentabilidad

Huarte&Pi [*]

¿Se acuerdan del chiste del troglodita inventor de la rueda?

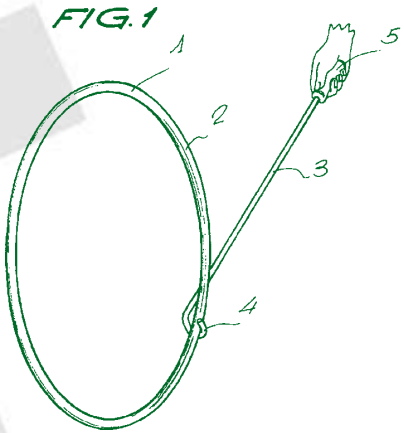

M. Ut. ES175974-U (1971)

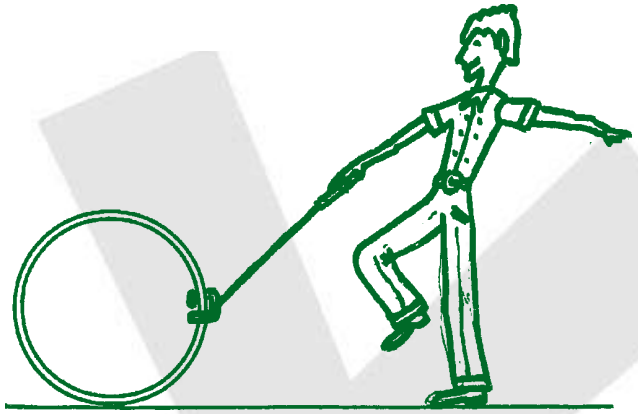

M. Ut. ES284268-U (1985)

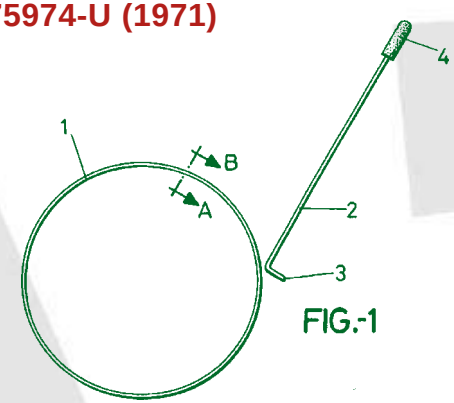

M. Ut. ES1027978-U (1994)

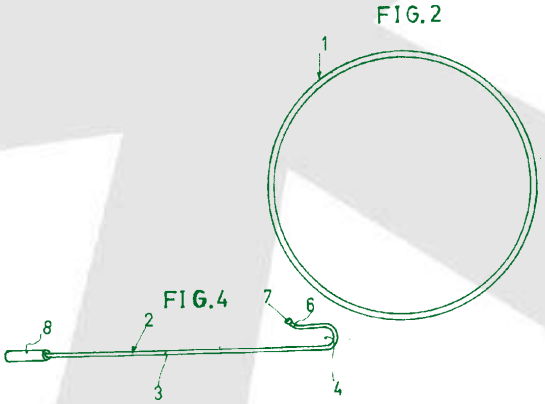

M. Ut. ES1054101-U (2003)

Publicaciones defensivas

Objetivo: Destruir la novedad.

Solicitud de patente publicada

Revistas y/o Congresos

Publicaciones defensivas especializadas (Research Disclo-sure)

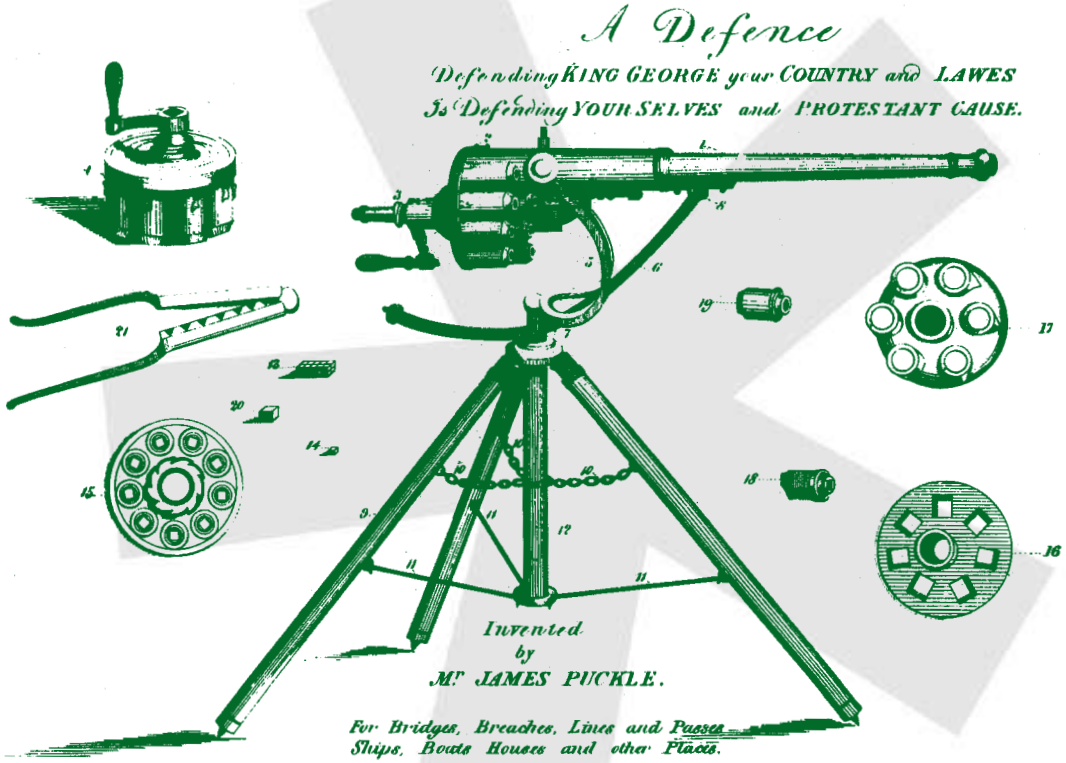

James Puckle (1718). "A defence"

RESEARCH DISCLOSURE

Research Disclosure, or **RD**, is the unique international defensive publication service that allows the world's researchers, scientists and inventors to establish the state of the art. It provides an alternative to obtaining a patent at a fraction of the cost and time taken. In both paper Journal and Electronic database formats **RD** is the world's longest running, independent, industry standard prior art disclosure service with over forty years of searchable back files.

RESEARCH DISCLOSURE

Overview

Research Disclosure

Why disclose?

Why leading companies use RD

Why patent offices worldwide use RD

PCT Minimum Documentation status

Full text searching

World's longest running disclosure service

Verification & date stamping

Patentability & validity search tool

Overview

Research Disclosure, or RD, is a defensive publication service that allows you to protect an invention as an alternative to patenting. If you have decided not to patent your invention on the grounds of cost or for any other reason, but you still wish to exploit it commercially, you must take some simple steps to protect it. Otherwise you risk the chance that someone else may later patent your invention and so prevent you from exploiting it yourself. It may sound unbelievable but it can and does happen!

You can protect yourself by publishing (disclosing) your invention as quickly as possible and so establish prior art. This is what RD does, we are the world's industry standard disclosure service. Every month we publish details of many inventions, both in our paper format RD Journal and also in our RD Electronic database. These are then distributed to every major patent office and many libraries worldwide. As RD is distributed to patent offices globally it ensures that, regardless of the different novelty standards of national patent systems, any item published in RD thereafter renders the invention described unpatentable by anyone else.

'Every month we publish details of many inventions, both in our paper format RD Journal and also in our RD electronic database'

It's a very simple service to use. You just send us the invention details you wish to disclose, and we publish them in both our paper and electronic RD formats. We charge you a modest one off fee and that is it. You can then rest assured that the patent examiners will see it for decades to come while you concentrate on developing your invention. With the ever-increasing patents fees throughout the world, RD is an economical, easy and highly valuable alternative or, in some cases, addition to patenting.

© Kenneth Mason Publications Ltd 2003

RESEARCH DISCLOSURE

Contact Us

UK, Europe & Rest of the World
Kenneth Mason Publications Ltd
The Book Barn
Westbourne
Hampshire
PO10 8RS
UK
Tel 00 44 (0)1243-377977
Fax 00 44 (0)1243-379136
info@researchdisclosure.com

USA, Canada & South America
Emsworth Design Inc
200 Park Avenue South
Room 1101
New York
NY 10003
U S A
Tel 001 212-353-1435
Fax 001 212-353-1146
adrobinski@earthlink.net

Click on an email address above to link directly to your email utility and send us your comments, queries or feedback. Please include your **name** and **company** in the body of the email plus any other contact details you wish us to have.Your communication by telephone, letter or fax is also welcome.

© Kenneth Mason Publications Ltd 2003

Research Disclosure en Derwent

2/75 ZWPI - (C) Derwent Info. 1994
AN - 87-019777 [03]
TI - Refractive index change correction system for plastics lens - includes three lens portions integrally formed so that refractive index is changed in non-homogeneous manner
PA - (ANON) ANONYMOUS
PN - RD-272002 A 861210 DW8703
PR - 86RD-272002 861120
AP - 86RD------- 861120
IC - G02B-000/01
AB - RD-272002 An objective lens (7) comprises two effective dia. portions (12,13) formed as aspheric surfaces and a portion (14) surrounding these and formed in integral with them of plastics. A part (14a) of the flange portion is cut out to exposepartially to atmosphere the outer periphery connected to the second effective dia. portion.

In an atmosphere of high humidity, when a water impinges into a lens body, approx, the same amounts of water exist in all portions viewed in parallel with the optical axis within the effective dia. portions. A refractive index is changed inhomogeneously within the first two portions, and a parallel light incident to the objective lens is converged to a point (Po) on the optical axis (16). In this case, a wave front (19) does not have a wave front abberation and is thus represented as an arc having a point (Po) as a centre.

USE - To compensate for high humidity in atmos.(Dwg.No 1/2)

¿Cuándo patentar?

¡Cuanto antes, pero bien!

Porque la redacción de la solicitud prioritaria es extremadamente importante para el futuro de las patentes que se generen con base en ella.

Prioridad
Adiciones
Renuncia y resolicitud

Frederick W. Lanchester
Frenos de disco (1902)

26,407. Motor road vehicles. LANCHESTER, F. W., Armourer Mills, Montgomery Street, Sparkbrook, Birmingham. Dec. 1.

Comprises a form of brake for power-propelled road vehicles, in which a metal disc or other element carried by the wheel hub is subjected to the action of a pair of gripping-jaws. Fig. 2 shows the brake in side elevation. A metal disc *a* is secured to the road-wheel hub, and on each side of it are the jaws *c*, *d*. The jaw *d* is at one end of a lever *e*, which is held to the fixed casing *i* by a plate *f* and link *h*. The lever *e* is forked, and between its two branches is lodged a lever *m* which has at one end the other jaw *c*. The jaws are caused to grip the disc by a pull exerted on the lever *m* by the bar *p*.

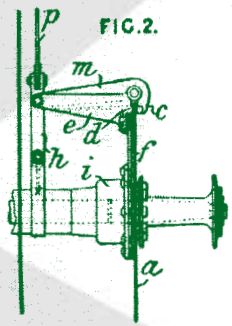

Publicaciones v. Patentes

Un consejo: No divulgar nada, por ningún medio, hasta que no se haya publicado la primera solicitud de patente.

¿Dónde patentar?

Decisión empresarial en función de:

- Naturaleza del invento
  - Importancia económica
  - Calidad inventiva
- Area geográfica de interés
  - Implantación de mercado
  - Posibilidad de licenciar
- Costes
  - Elaboración de presupuesto y periodificación del mismo a lo largo del tiempo

MINISTERIO DE CIENCIA Y TECNOLOGÍA

Oficina Española de Patentes y Marcas

¿Dónde patentar?

En mi opinión, una estrategia recomendable para una empresa española pequeña o mediana es:

(1) Presentar la solicitud prioritaria en España, con un juego de reivindicaciones que permita proteger, en reivindicaciones diferentes, tanto realizaciones muy amplias como muy concretas.

(2) Agotar el año de prioridad y presentar una solicitud PCT en español, designando a todos los países y convenios regionales (capítulo II, con IPER). No abandonar la solicitud nacional española y continuar su tramitación hasta el final.

(3) Se dispone de 30/31 meses desde la fecha de prioridad para decidir definitivamente los países o convenios en los que se introduce la PCT. Si continúa el interés, efectuar la entrada en la fase regional europea (31 meses), e introducir la PCT en otros países que interesen.

(4) Si se consigue superar el examen europeo satisfactoriamente, validar la patente EP en España y abandonar la patente nacional.
(4') Si la restricción sufrida en el examen europeo es muy importante, validar en otros países pero no en España, o abandonar antes de que se produzca una decisión de rechazo y mantener en vigor la patente española.

¿Cómo patentar?

La redacción de la solicitud de patente es un trabajo para un experto en patentes que tenga una buena capacidad de comprensión sobre la tecnología implicada, y que disponga de un estado de la técnica suficientemente bien acotado (análisis de patentabilidad).

La persona menos apropiada para redactar la patente es el inventor.

Especial atención a la suficiencia de la descripción.

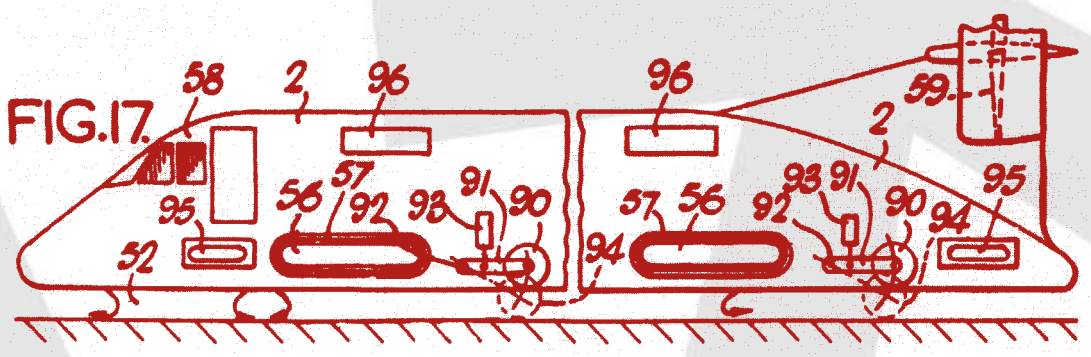

Christopher Cockerell (1960). Air cushion vehicles.

Las patentes en los contratos de licencia

Análisis sobre el valor de las patentes

¿Cuál es su situación registral?
¿Resistiría un pleito de nulidad?
¿Hay dependencia con otras patentes?
¿Deja resquicio a soluciones técnicas alternativas no equivalentes?
¿Existen otras patentes que protejan tecnología más avanzada sobre el mismo objeto?

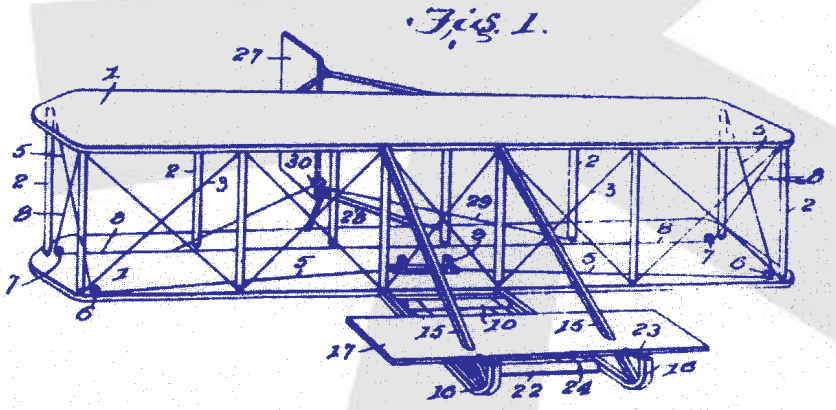

Orville & Wilbur Wright (1904). Aeroplano.

Las patentes en los contratos de licencia

Cláusulas necesarias que afectan a las patentes

De mantenimiento en vigor de la patente.
De política a seguir contra los infractores.
De garantías de no infracción de otras patentes.
De modificación del contrato en caso de nulidad o caducidad de la patente.

Las cláusulas que impiden al licenciatario atacar la validez de la patente ante los tribunales son inválidas.

La prevención de riesgo de infracción

España. Mas de 50.000 nuevas solicitudes de patente cada año.

Menos de 4.000 provienen de empresas españolas, y en su mayoría son modelos de utilidad

PRESIÓN TECNOLÓGICA

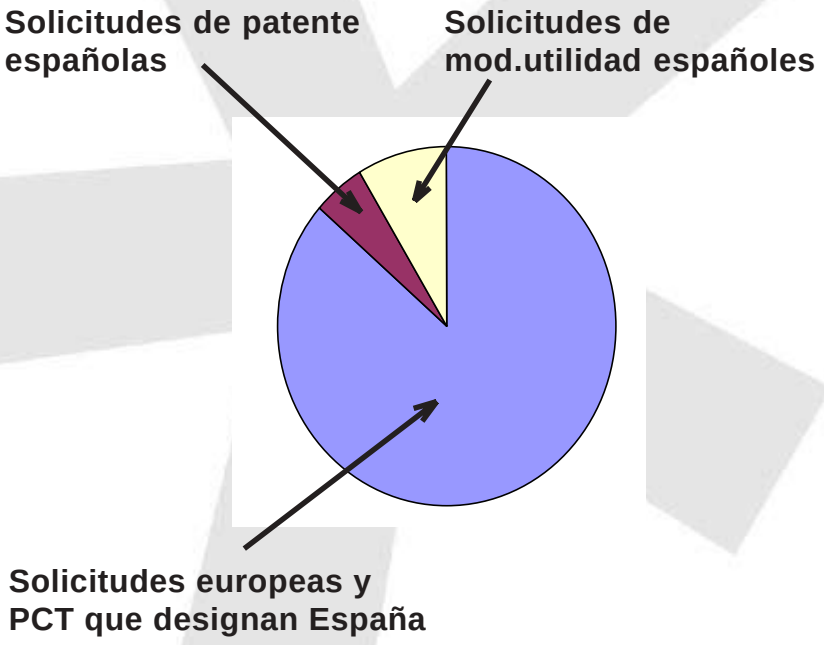

La prevención de riesgo de infracción

La empresa en defensa de sus patentes

El principal interés de la empresa es que no le copien, no ganar pleitos.

Control de lo que pasa en el mercado (red de ventas, distribuidores, etc.).

Difusión activa de los derechos (etiquetado, anuncios).

Acciones de advertencia (requerimientos, Intimidación de intermediarios).

Huarte&Pi [*]

La empresa en defensa de sus patentes

Anuncio publicado en SCRIP

BIOCHEMIE GmbH invites interested readers to note the following:

BIOCHEMIE is the owner of EUROPEAN PATENT No 37 380 and its equivalents in other countries.

These Patents protect an activated ester ('MAEM') technology for the synthesis of cefalosporins such as CEFOTAXIME, CEFTRIAXONE and others.

EUROPEAN PATENT No 37 380 and its equivalents in other countries will expire on March 25, 2001 or later.

BIOCHEMIE is prepared to enforce its rights under these patents if necessary.

For information please contact Project Management at BIOCHEMIE
either by phone ++43 5338 200 603
or fax ++43 5338 200 443
or e-mail BC.projects@gx.novartis.com

BIOCHEMIE

Biochemie is a member of the Novartis Group

Biochemiestrasse 10
A-6250 Kundl
Austria

La empresa en defensa de sus patentes

Si las acciones preventivas fallan, la empresa debe estar dispuesta a hacer valer sus derechos por vía judicial.

En caso contrario hubiese sido mejor no patentar.

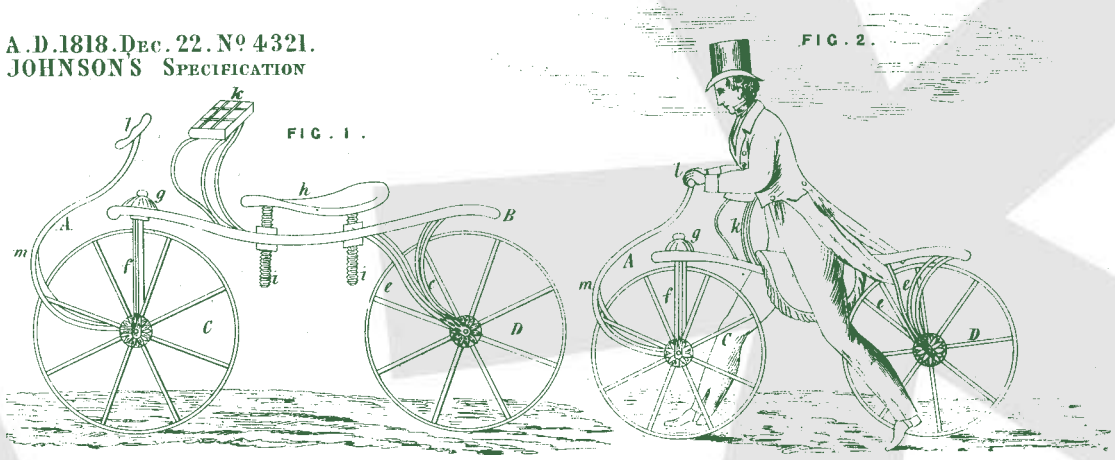

Denis Johnson (1818). "Hobbyhorse", una copia de la "Draisienne" francesa.

La prevención de riesgo de infracción

La empresa como potencial infractora

Pocas empresas deciden deliberadamente infringir patentes, pero cualquiera que fabrique, comercialice o use un producto o proceso corre el riesgo de infringir alguna patente.

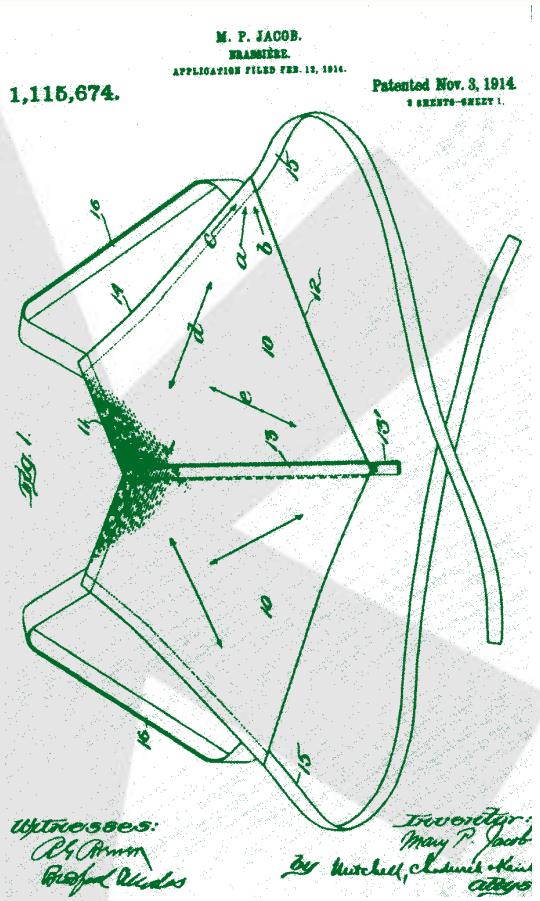

Mary P. Jacob (1914). Sujetador

La empresa como potencial infractora

Prevención pasiva

Estudio de los posibles riesgos de infracción antes de efectuar gastos e inversiones para una determinada acción industrial o comercial. Análisis de riesgos

Coordinación entre departamentos. Gestión de compras.

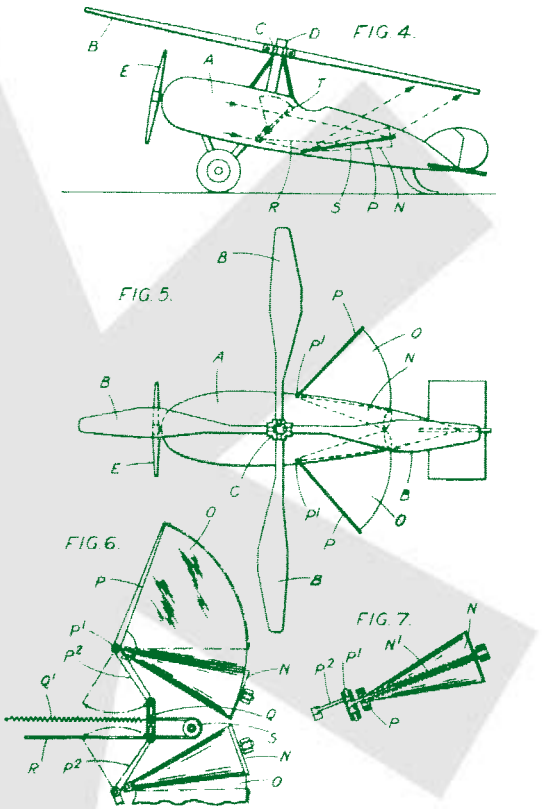

Juan de la Cierva (1930). Autogiro

La empresa como potencial infractora. Análisis de riesgos

Búsqueda

Patentes en vigor en el área geográfica implicada.
Situación registral de las patentes pertinentes.

Valoración

Grado de infracción.
Fortaleza de las patentes.
Antecedentes de examen o conflictos en otros países.

El estudio lo debe efectuar un experto en patentes que tenga una buena capacidad de comprensión sobre la tecnología implicada y que disponga de suficientes conocimientos jurídicos. La opinión del experto debiera ser sometida a la consideración de un abogado experto en patentes, con suficiente experiencia en litigios.

285,738. Optical apparatus. TELEVISION, Ltd. and BAIRD, J. L., Motograph House, Upper St. Martin's Lane, London. Oct. 15, 1926, No. 20969/27. [Class 97 (i).]

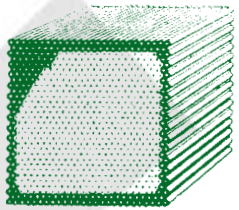

To produce or reproduce an image of an extended object, light from each "point" of the object or of an image thereof is caused to follow a path which throughout its length is separate from the path followed by light from any other point. A "point" for this purpose is defined as an elemental area of uniform brilliance and sufficiently small to provide the desired definition in the final image. In one arrangement a bundle of long narrow straight tubes, as shown in the Figure, is placed between the object or image and the screen upon which the final image is produced, each tube corresponding to a "point." These tubes may be parallel or slightly diverging or converging and may in the latter case be of tapering diameter. Alternatively, bent or curved tubes provided with reflecting internal surfaces, or bent or curved rods or tubes of glass, quartz, or other transparent material, including fine flexible quartz fibres, may be used.

James Logie Baird
(1928) Fibra óptica

La empresa como potencial infractora. Prevención activa

Vía Administrativa

Poner trabas a la concesión de patentes de la competencia mediante observaciones y oposiciones.

España
Observaciones al IET
Oposiciones a las patentes sometidas a examen ¡antes de que de produzca el examen!
Modelos utilidad: Oposiciones

Convenio Europeo
Observaciones
Oposiciones post-concesión

Alemania, Japón, Holanda, etc.
Oposiciones post-examen

U.S.A.
Reexamination post-concesión

La empresa como potencial infractora. Prevención activa

Vía judicial

Acción negatoria (artículo 127 LP)
Demanda de nulidad preventiva

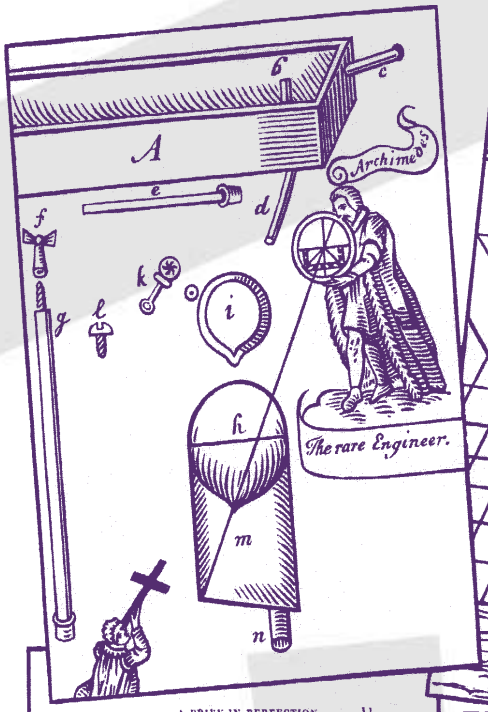

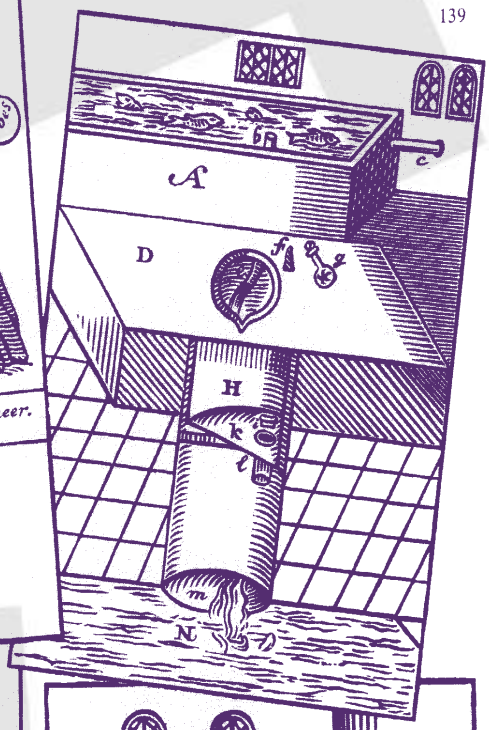

A PRIVY IN PERFECTION. 11

Here are the parts set down, with a rate of the prices; that a builder may guess what he hath to pay.

	s.	d.
A the cistern; stone or brick. Price . .	6	8
b, d, e the pipe that comes from the cistern, with a stopple to the washer . . .	3	6
c a waste pipe	1	0
f, g the stem of the great stopple, with a key to it	1	6
h the form of the upper brim of the vessel or stool-pot.		
m the stool-pot, of stone	8	0
n the great brass sluice, to which is three inches current to send it down a gallop into the Jax	10	0

And lest you should mislike with this phrase, I had it in a verse of a grave author, that was wont to walk up and down the court with a forest bill; I have forgot how it began (like a beast as he was), but it ended in rhyme:

O that I were at Oxenford, to eat some Banbury cakes.

i the seat, with a peak devant for elbow-room. The whole charge thirty shillings and eight pence: yet a mason of my masters was offered thirty pounds for the like. Memorandum. The scale is about half an inch to a foot.

L 2

355 These pages are copied from an 1814 edition of Sir John Harington's *The Metamorphosis of Ajax*. This was one of the inventions for which Queen Elizabeth refused to grant a patent.

A godly father, sitting on a draught,
To do as need and nature hath us taught.

Water Closet. Sir John Harrison (1596)
La reina Elizabeth I rehusó conceder la patente solicitada

Huarte&Pi [*]