Predoc contract for PhD Thesis

Group *Printed OptoElectronics*, Department of Electronic and Biomedical Engineering, Universitat de Barcelona.

Topic of thesis: Disruptive technologies for optoelectronic devices and neuromorphic computation.
Keyword: inkjet printing, LEDs, ReRAM, memristors, neuromorphic computation*, unclonable physical functions, encryption.*

We search: *Degree in Physics/Electronic Engineering/others engineering + master sc/tech. Self-criticism, analytic and disruptive thinking, motivation for oriented research.*

We offer: *Integration in wide and reputed group, work in team with high level experimental equipment, continuous and multidisciplinary learning, attendance to national and international congresses, international research stages.*

Salary: 1st year 17640 € → 4th year 23640 €

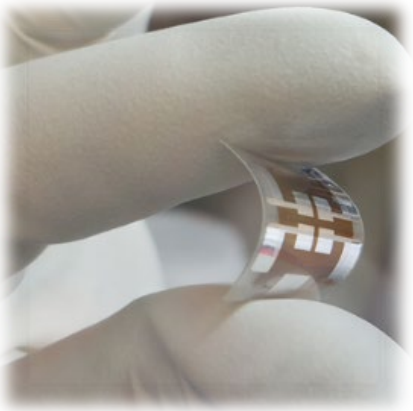

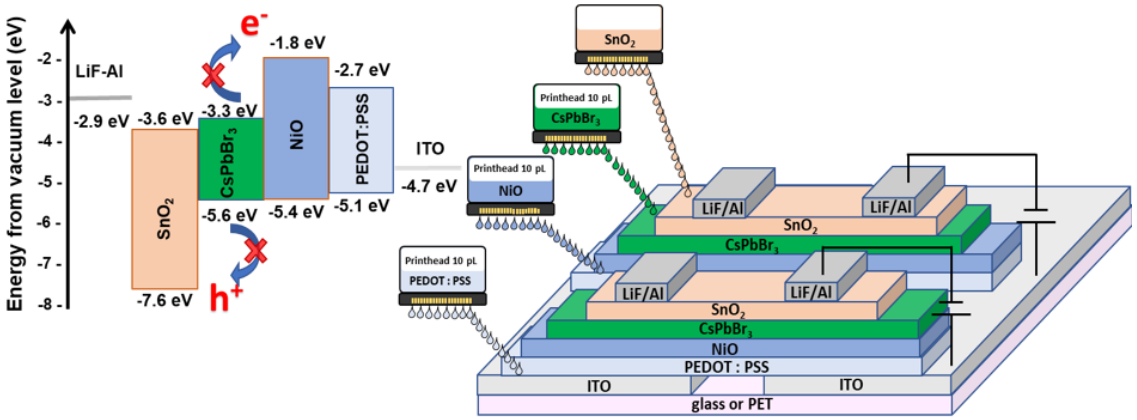

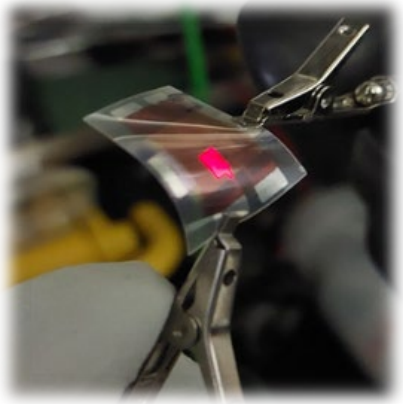

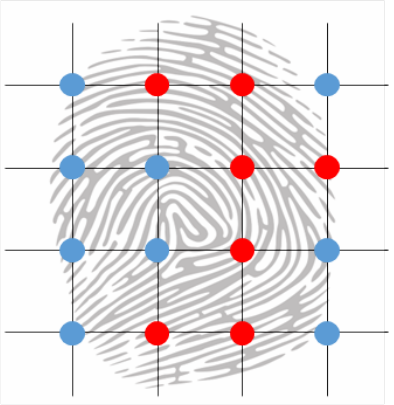

Contact to Prof. Dr. Albert Cirera acirera@ub.edu: send CV and motivation letter